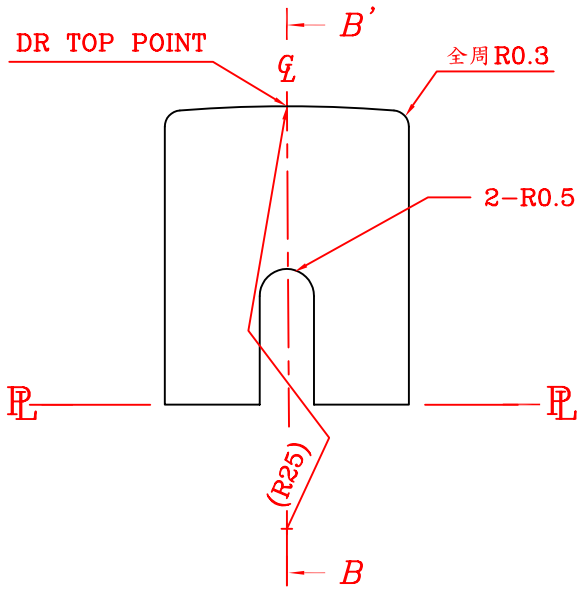

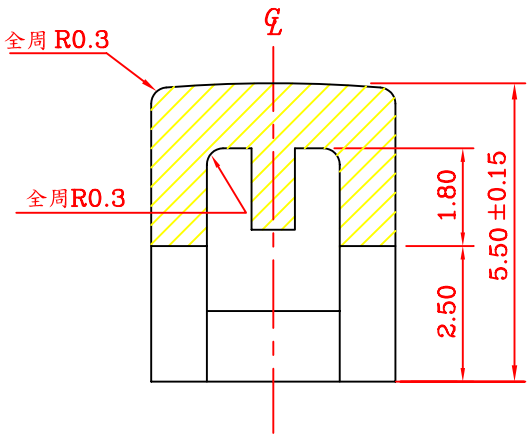

SEC B-B'

NOTE :

1. General Tolerance:±0.05mm MAX.

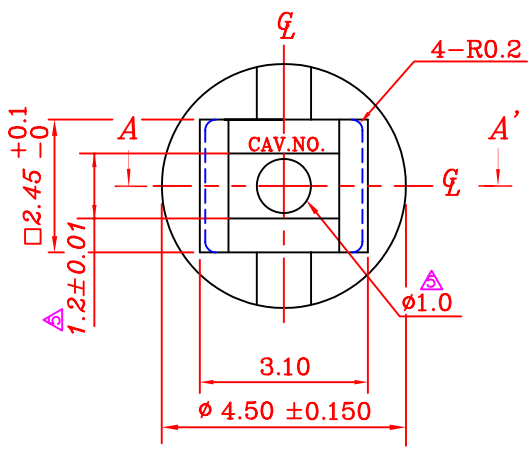

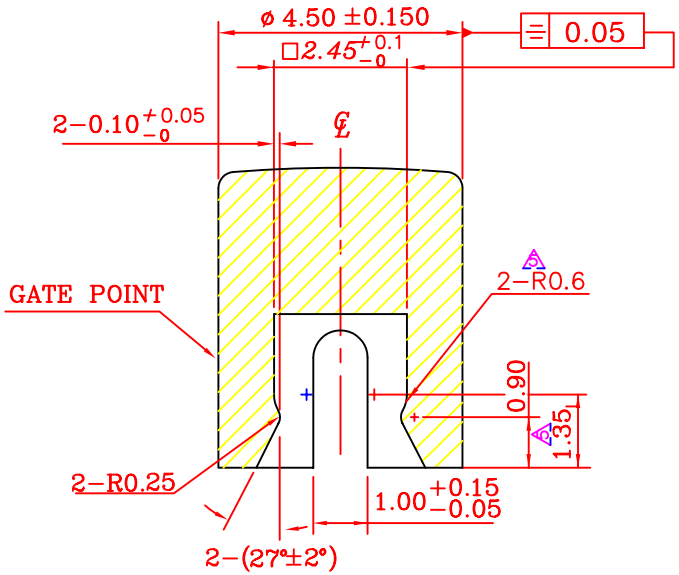

SEC A-A'

附表A	PART NO.	COLOR		TYPE
	KTSC-62	Y	(YELLOW)	(Circular)
		B	(BLUE)	
		R	(RED)	
		I	(IVORY)	
		K	(BLACK)	
		G	(GREEN)	
		S	(SALMON) 4	

ZONE	REV	DESCRIPTION	DATE	APPD.
5	E	修訂 5 尺寸	07.06'01	
4	D	修訂附表A增加橙色	09.30'99	楊豐富
3	C	修訂附表A	09.04'98	楊豐富
2	B	修訂附表A	11.14'97	楊豐富
1	A	DWG. REL.	2.14'95	施教郎

APPD:	Q'TY:	圜達實業股份有限公司 DIPTRONICS MANUFACTURING INC.	PART NAME: CAP (DTSK TYPE) 6X6
CHKD:	SCALE: 10:1		
DR:	REV: D / UNITS: mm	PART NO: KTSC-62 / MAT'L: ABS	DWG NO: RD5P6-29
DESIGN:		FINISH:	